YAMAHA 2002

YFM400FWA(P)

5GH3-AE2

SUPPLEMENTARY SERVICE MANUAL

FOREWORD

This Supplementary Service Manual has been prepared to introduce new service and new data for the YFM400FWA(P) 2002. For complete information on service procedures, it is necessary to use this Supplementary Service Manual together with the following manual.

YFM400FWA(M) 2000 SERVICE MANUAL: 5GH3-AE1

YFM400FWA(P) 2002
SUPPLEMENTARY
SERVICE MANUAL

First Edition, June 2001

EB001000

NOTICE

This manual was produced by the Yamaha Motor Company primarily for use by Yamaha dealers and their qualified mechanics. It is not possible to include all the knowledge of a mechanic in one manual, so it is assumed that anyone who uses this book to perform maintenance and repairs on Yamaha machine has a basic understanding of the mechanical ideas and the procedures of machine repair. Repairs attempted by anyone without this knowledge are likely to render the machine unsafe and unfit for use.

Yamaha Motor Company, Ltd. is continually striving to improve all its models. Modifications and significant changes in specifications or procedures will be forwarded to all authorized Yamaha dealers and will appear in future editions of this manual where applicable.

NOTE:
Designs and specifications are subject to change without notice.

IMPORTANT INFORMATION

Particularly important information is distinguished in this manual by the following notations.

⚠ The Safety Alert Symbol means ATTENTION! BECOME ALERT! YOUR SAFETY IS INVOLVED!

⚠ WARNING Failure to follow WARNING instructions could result in severe injury or death to the machine operator, a bystander or a person inspecting or repairing the machine.

CAUTION: A CAUTION indicates special precautions that must be taken to avoid damage to the machine.

NOTE: A NOTE provides key information to make procedures easier or clearer.

EB002000

HOW TO USE THIS MANUAL

MANUAL ORGANIZATION

This manual consists of chapters for the main categories of subjects. (See “Illustrated symbols”)

1st title ①: This is the title of the chapter with its symbol in the upper right corner of each page.

2nd title ②: This title indicates the section of the chapter and only appears on the first page of each section. It is located in the upper left corner of the page.

3rd title ③: This title indicates a sub-section that is followed by step-by-step procedures accompanied by corresponding illustrations.

EXPLODED DIAGRAMS

To help identify parts and clarify procedure steps, there are exploded diagrams at the start of each removal and disassembly section.

1. An easy-to-see exploded diagram ④ is provided for removal and disassembly jobs.
2. Numbers ⑤ are given in the order of the jobs in the exploded diagram. A number that is enclosed by a circle indicates a disassembly step.
3. An explanation of jobs and notes is presented in an easy-to-read way by the use of symbol marks ⑥. The meanings of the symbol marks are given on the next page.
4. A job instruction chart ⑦ accompanies the exploded diagram, providing the order of jobs, names of parts, notes in jobs, etc.
5. For jobs requiring more information, the step-by-step format supplements ⑧ are given in addition to the exploded diagram and the job instruction chart.

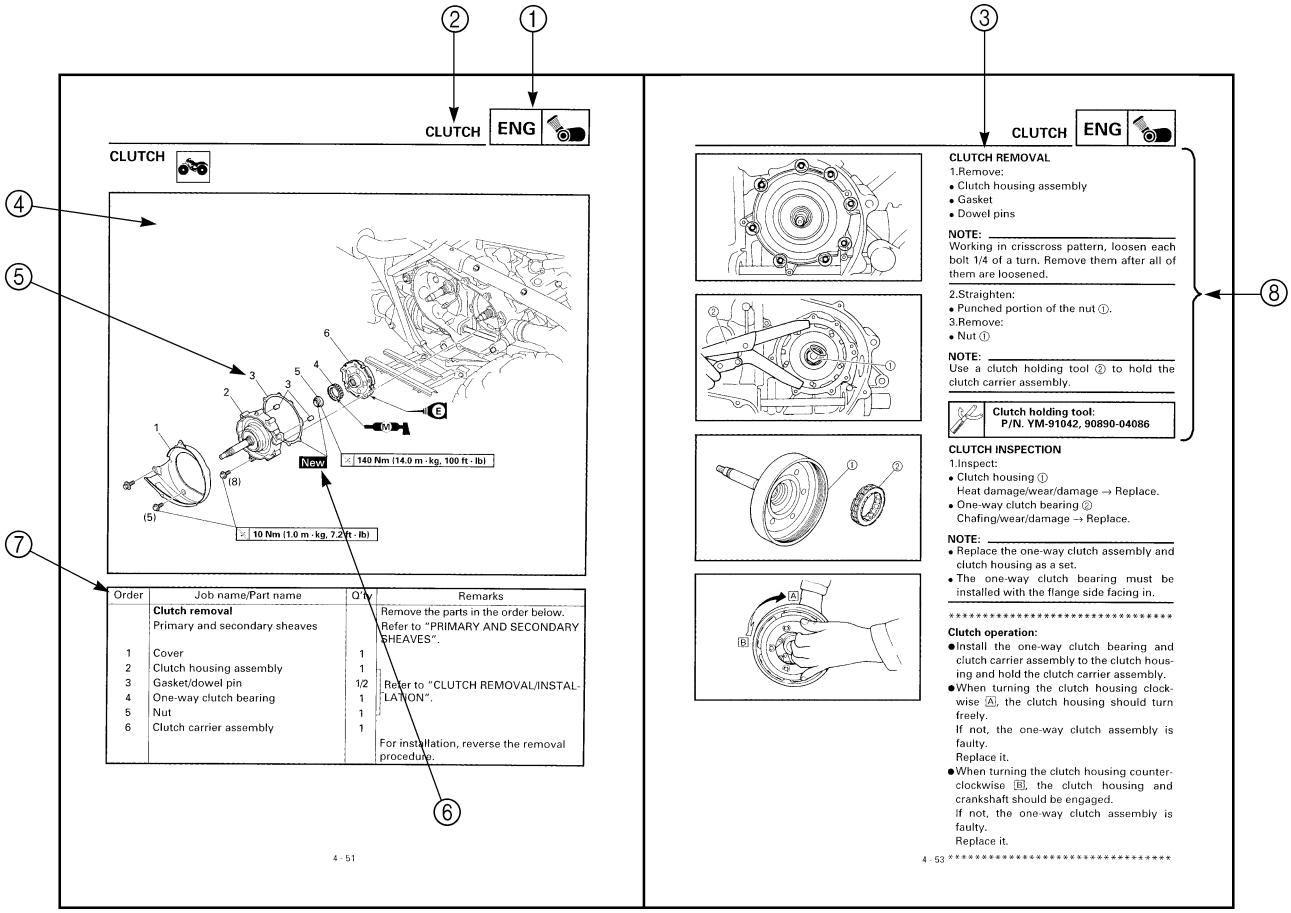

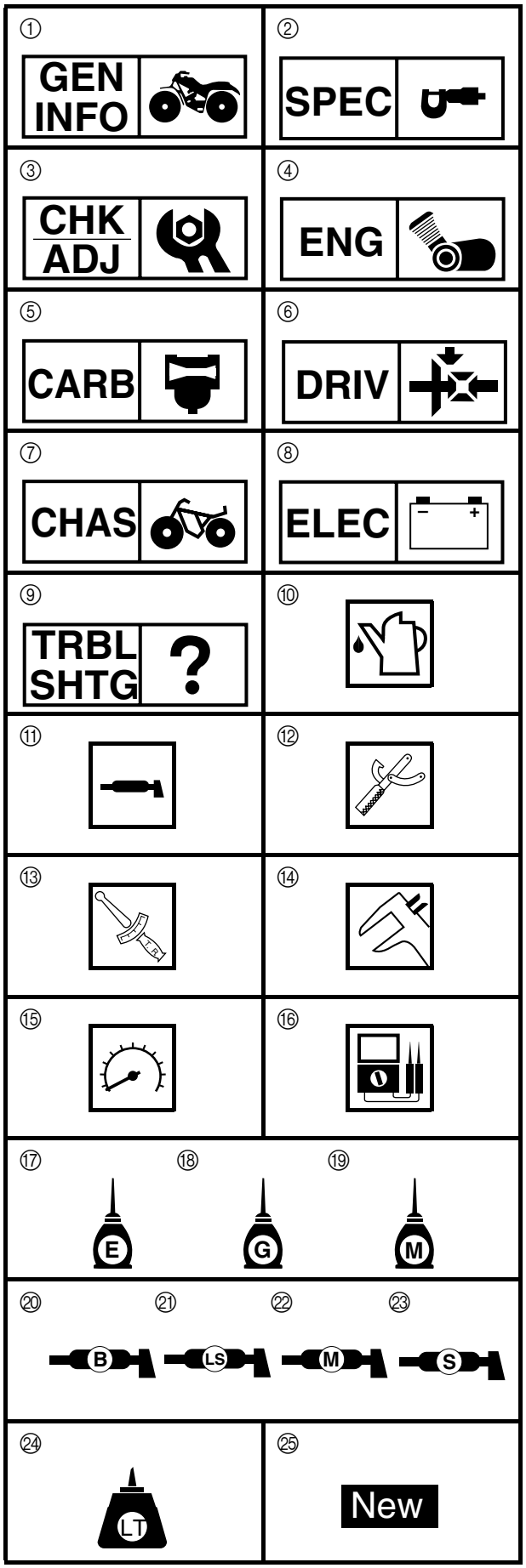

EB003000

ILLUSTRATED SYMBOLS

Illustrated symbols ① to ⑨ are printed on the top right of each page and indicate the subject of each chapter.

① General information
② Specifications
③ Periodic checks and adjustments
④ Engine
⑤ Carburetion
⑥ Drive train
⑦ Chassis
⑧ Electrical
⑨ Troubleshooting

Illustrated symbols ⑩ to ⑯ are used to identify the specifications appearing in the text.

⑩ Filling fluid
⑪ Lubricant
⑫ Special tool
⑬ Torque
⑭ Wear limit, clearance
⑮ Engine speed
⑯ Ω, V, A

Illustrated symbols ⑰ to ㉓ in the exploded diagrams indicate the types of lubricants and lubrication points.

⑰ Apply engine oil
⑱ Apply gear oil
⑲ Apply molybdenum disulfide oil
⑳ Apply wheel bearing grease
㉑ Apply lightweight lithium soap base grease
㉒ Apply molybdenum disulfide grease
㉓ Apply silicon grease

Illustrated symbols ㉔ to ㉕ in the exploded diagrams indicate where to apply a locking agent ㉔ and when to install a new part ㉕.

㉔ Apply the locking agent (LOCTITE®)
㉕ Replace

CONTENTS

SPECIFICATIONS

GENERAL SPECIFICATIONS

Item	Standard
Model code:	5GHL: (CDN) 5GHM: (Europe) 5GHN: (Oceania)
Engine:	
Engine type	Liquid-cooled 4-stroke, SOHC
Cylinder arrangement	Forward-inclined single cylinder
Displacement	401 cm^3
Bore × stroke	84.5 × 71.5 mm (3.33 × 2.81 in)
Compression ratio	10.5 : 1
Standard compression pressure (at sea level)	1,400 kPa (14.0 kg/cm^2, 203 psi) at 750 r/min
Starting system	Electric and recoil starter
Lubrication system:	Wet sump
Tire pressure (cold tire):	
Maximum load*	210 kg (463 lb)
Off-road riding front	22 ~ 28 kPa (0.22 ~ 0.28 kg/cm^2, 3.2 ~ 4.1 psi)
rear	22 ~ 28 kPa (0.22 ~ 0.28 kg/cm^2, 3.2 ~ 4.1 psi)
*Load in total weight of rider accessories	
Electrical:	
Ignition system	DC. C.D.I.
Generator system	A.C. magneto
Battery type	YTX20L-BS
Battery capacity	12 V 18 AH
Bulb wattage × quantity:	
Headlight	12 V 30 W/30 W × 2
Tail/brake light	12 V 5 W/21 W × 1
Indicator lights	
Neutral	12 V 1.7 W × 1
Reverse	12 V 1.7 W × 1
Coolant temperature	12 V 1.7 W × 1
Four-wheel drive	12 V 1.7 W × 1
Park	12 V 1.7 W × 1

MAINTENANCE SPECIFICATIONS

ENGINE

Item	Standard	Limit
Cylinder:		
Bore size	84.500 ~ 84.510 mm (3.3268 ~ 3.3272 in)	84.600 mm (3.3307 in)
Taper limit	----	0.05 mm (0.0016 in)
Out of round limit	----	0.01 mm (0.0004 in)
Measuring point ✻	40 mm (1.57 in)	----
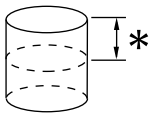		
Cam chain:		
Cam chain type/No. of links	DID SCR-0409 SDH/116	----
Cam chain adjustment method	Automatic	----
Rocker arm/rocker arm shaft:		
Bearing inside diameter	12.000 ~ 12.018 mm (0.4724 ~ 0.4731 in)	12.078 mm (0.4755 in)
Shaft outside diameter	11.981 ~ 11.991 mm (0.4717 ~ 0.4721 in)	11.951 mm (0.4705 in)
Arm-to-shaft clearance	0.009 ~ 0.037 mm (0.0004 ~ 0.0015 in)	0.08 mm (0.0031 in)
Piston:		
Piston to cylinder clearance	0.040 ~ 0.065 mm (0.0016 ~ 0.0026 in)	0.15 mm (0.0059 in)
Piston size “D”	84.445 ~ 84.460 mm (3.3246 ~ 3.3252 in)	----
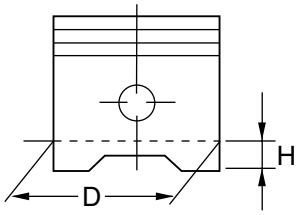		
Measuring point “H”	5 mm (0.20 in)	----
Piston off-set	0.5 mm (0.0200 in)	----
Off-set direction	Intake side	----
Piston pin bore inside diameter	20.004 ~ 20.015 mm (0.7876 ~ 0.7880 in)	20.045 mm (0.7892 in)
Piston pin outside diameter	19.993 ~ 20.000 mm (0.7871 ~ 0.7874 in)	19.973 mm (0.7863 in)

Item		Standard	Limit
Automatic centrifugal clutch:			
Clutch shoe thickness		1.5 mm (0.06 in)	1.0 mm (0.04 in)
Clutch-in revolution		1,960 ~ 2,240 r/min	----
Clutch-stall revolution		3,300 ~ 3,900 r/min	----
Carburetor:			
I.D.mark		5GH9 11	----
Main jet	(M.J)	#130	----
Main air jet	(M.A.J)	#50	----
Jet needle	(J.N)	5EP3-55-3	----
Needle jet	(N.J)	P-0M	----
Pilot air jet	(P.A.J.1)	#80	----
Pilot air jet	(P.A.J.2)	1.3	----
Pilot outlet	(P.O)	0.95	----
Pilot jet	(P.J)	#17.5	----
Bypass1	(B.P.1)	0.8	----
Bypass2	(B.P.2)	0.8	----
Bypass3	(B.P.3)	0.8	----
Valve seat size	(V.S)	2.0	----
Starter jet	(G.S.1)	#70	----
Starter jet	(G.S.2)	0.9	----
Throttle valve size	(Th.V)	#90	----
Float height	(F.H)	13 mm (0.51 in)	----
Fuel level	(F.L)	3 ~ 4 mm (0.12 ~ 0.16 in)	----
Engine idle speed		1,450 ~ 1,550 r/min	----
Intake vacuum		32 kPa (240 mmHg, 9.45 inHg)	----
Oil filter type:		Foam	----
Oil pump:			
Oil pump type		Trochoid	----
Tip clearance “A” or “B”		0.15 mm (0.006 in)	0.2 mm (0.008 in)
Side clearance		0.04 ~ 0.09 mm (0.0016 ~ 0.0035 in)	----
Bypass valve setting pressure		78 ~ 118 kPa (0.78 ~ 1.18 kg/cm², 11.3 ~ 17.11 psi)	----
Oil pressure (hot)		7 kPa (0.07 kg/cm², 1.02 psi) at 1,500 r/min	----
Pressure check location		Cylinder head	----
Shaft drive:			
Middle gear backlash		0.1 ~ 0.3 mm (0.0039 ~ 0.0118 in)	----
Final gear backlash		0.1 ~ 0.2 mm (0.0039 ~ 0.0079 in)	----
Differential gear backlash		0.05 ~ 0.25 mm (0.002 ~ 0.0098 in)	----

ELECTRICAL

Item	Standard	Limit
C.D.I.:		
Magneto model/manufacturer	F4T46471/MITSUBISHI	----
Pickup coil resistance/color	459 ~ 561 Ω at 20 °C (68 °F)/ /White/Red-White/Green	----
Rotor rotation direction sensing coil resistance/color	0.104 ~ 0.127 Ω at 20 °C (68 °F)/ Red-White/Blue	----
C.D.I. unit model/manufacturer	F8T38672/MITSUBISHI	----
Ignition coil:		
Model/manufacturer	2JN/MORIYAMA	----
Minimum spark gap	6 mm (0.24 in)	----
Primary winding resistance	0.18 ~ 0.28 Ω at 20 °C (68 °F)	----
Secondary winding resistance	6.32 ~ 9.48 kΩ at 20 °C (68 °F)	----
Charging system:		
Type	A.C. magneto generator	----
Model/manufacturer	F4T464/MITSUBISHI	----
Nominal output	14 V 210 W 5,000 r/min	----
Charging coil resistance/color	0.70 ~ 0.86 Ω at 20 °C (68 °F)/ White-White	----
Rectifier/regulator:		
Type	Semi conductor-short circuit	----
Model/manufacturer	SH640E-11/SHINDENGEN	----
No load voltage (DC)	14.1 ~ 14.9 V	----
Capacity	14 A	----
Withstand voltage	200 V	----
Battery:		
Specific gravity	1,320	----

CABLE ROUTING

① Rear brake switch
② Rear brake cable
③ Front brake hose
④ On command four-wheel drive switch
⑤ Throttle cable
⑥ Horn switch

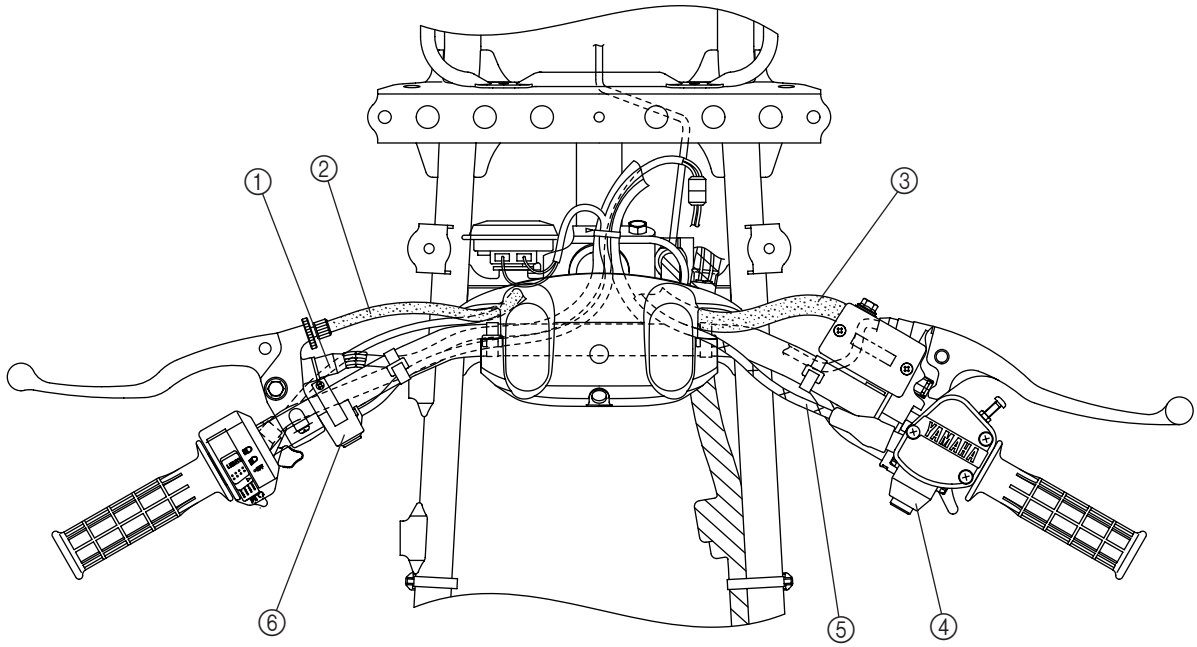

① On command four-wheel drive switch lead
② Front brake hose
③ Throttle cable
④ Rear brake cable
⑤ Rear brake switch lead
⑥ Handlebar switch
⑦ Starter cable
⑧ Coolant reservoir breather hose
⑨ Sub-wire harness 1 (to fan motor coupler)
⑩ Sub-wire harness 1 (to gear motor and four-wheel drive switch)
⑪ Differential gear case breather hose
⑫ Fan motor breather hose
⑬ Front brake light switch lead

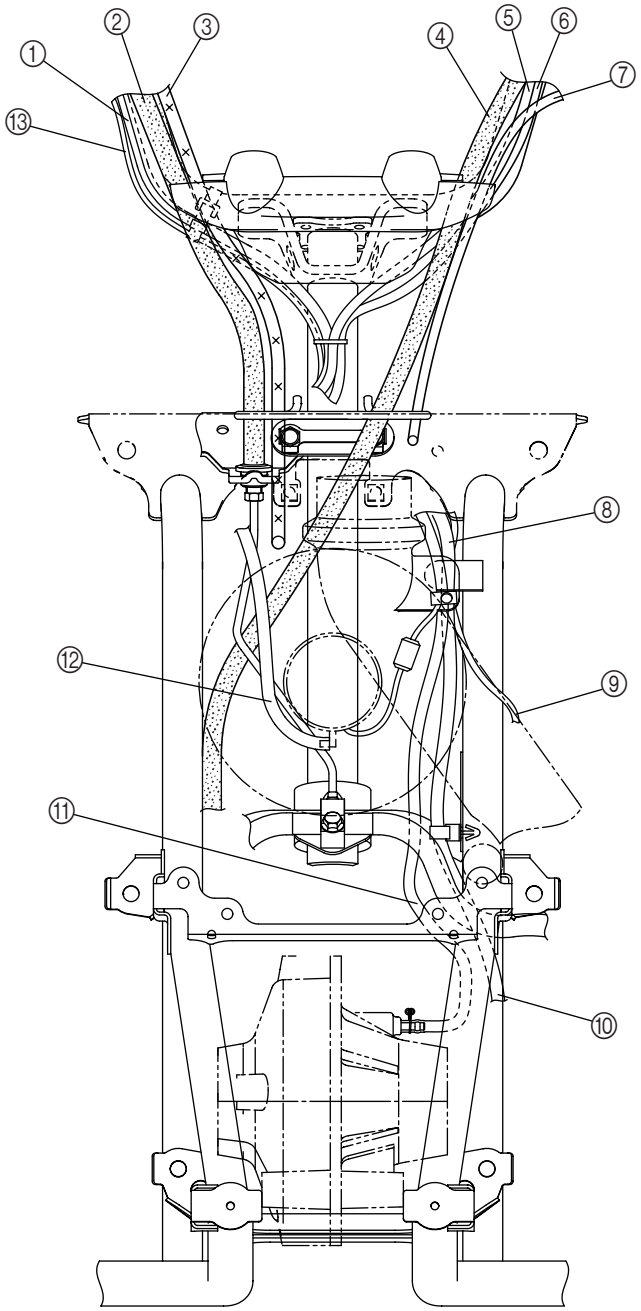

① Headlight coupler
② Circuit breaker
③ Terminal
④ Terminal coupler
⑤ Engine temperature warning light
⑥ Four-wheel drive indicator light
⑦ Neutral indicator light
⑧ Reverse indicator light
⑨ Parking indicator light
⑩ Coolant reservoir breather hose
⑪ Differential gear case breather hose
⑫ Indicator light coupler
⑬ Main switch coupler
⑭ Ignition coil lead

[A] Connect the headlight lead of the circuit breaker to the headlight on the right side.

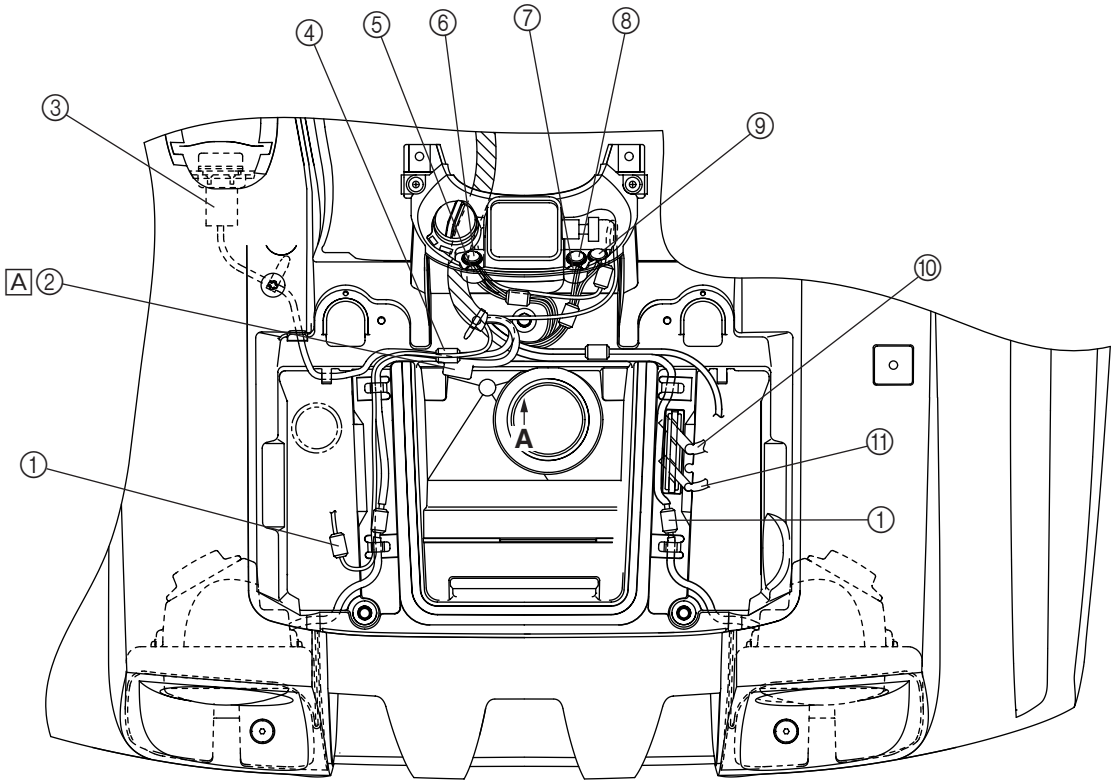

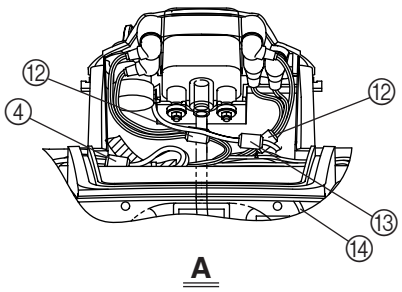

① Thermo switch
② Fuel tank breather hose
③ Carburetor drain hose
④ Speedometer cable
⑤ Coolant reservoir breather hose
⑥ Coolant reservoir hose
⑦ Sub-wire harness 1

A To hole on the front fender.
B Insert the fuel tank into the hole in the handlebar cover.
C 10 mm (0.4 in)

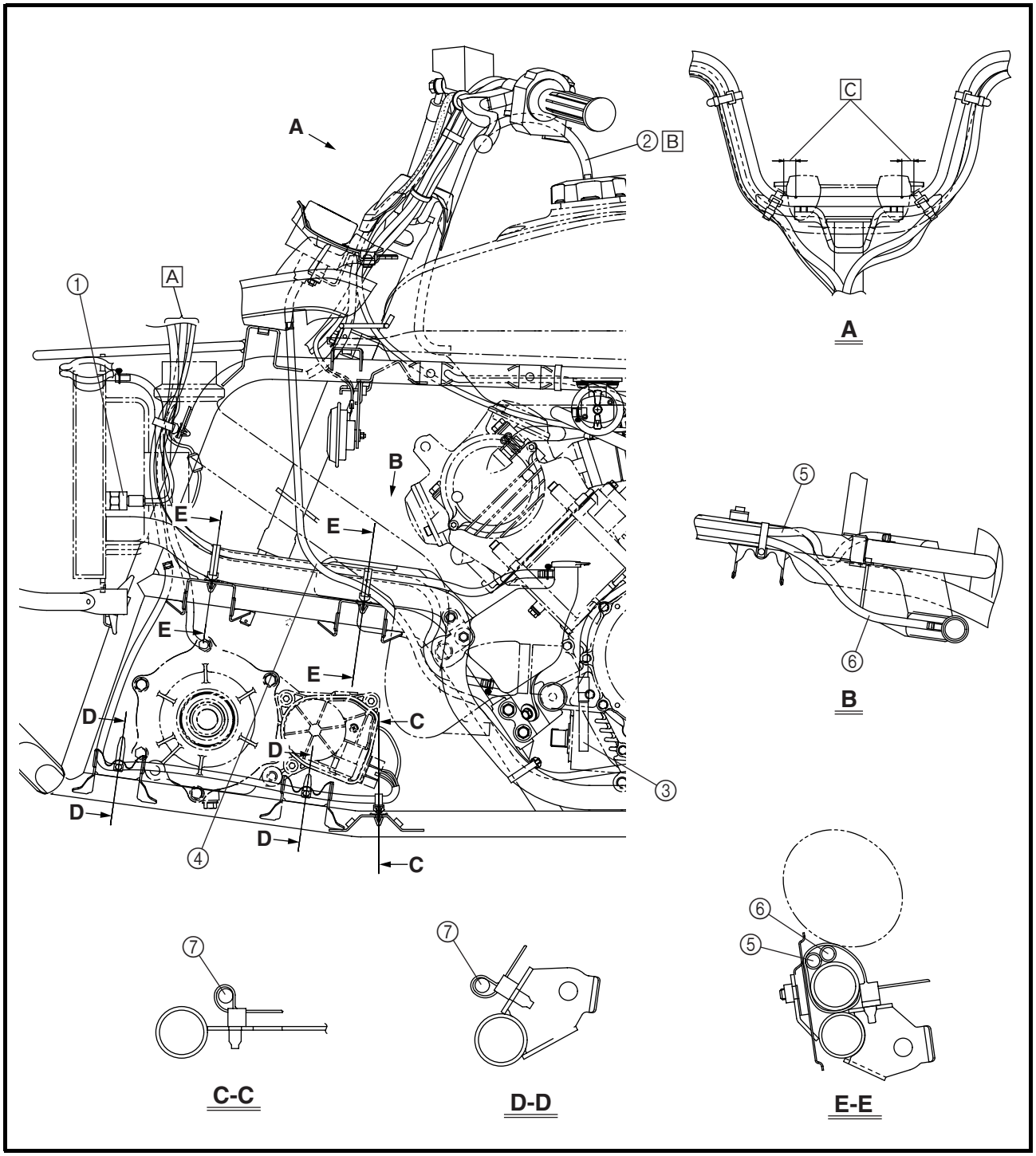

① Neutral switch lead
② Starter motor lead
③ Negative battery lead
④ Water pump breather hose
⑤ Speed sensor
⑥ Carburetor drain hose
⑦ Wire harness
⑧ Sub-wire harness 2
⑨ Ground lead
⑩ AC magneto lead
⑪ Final drive gear case breather hose
⑫ Speed sensor
⑬ Rectifier/regulator

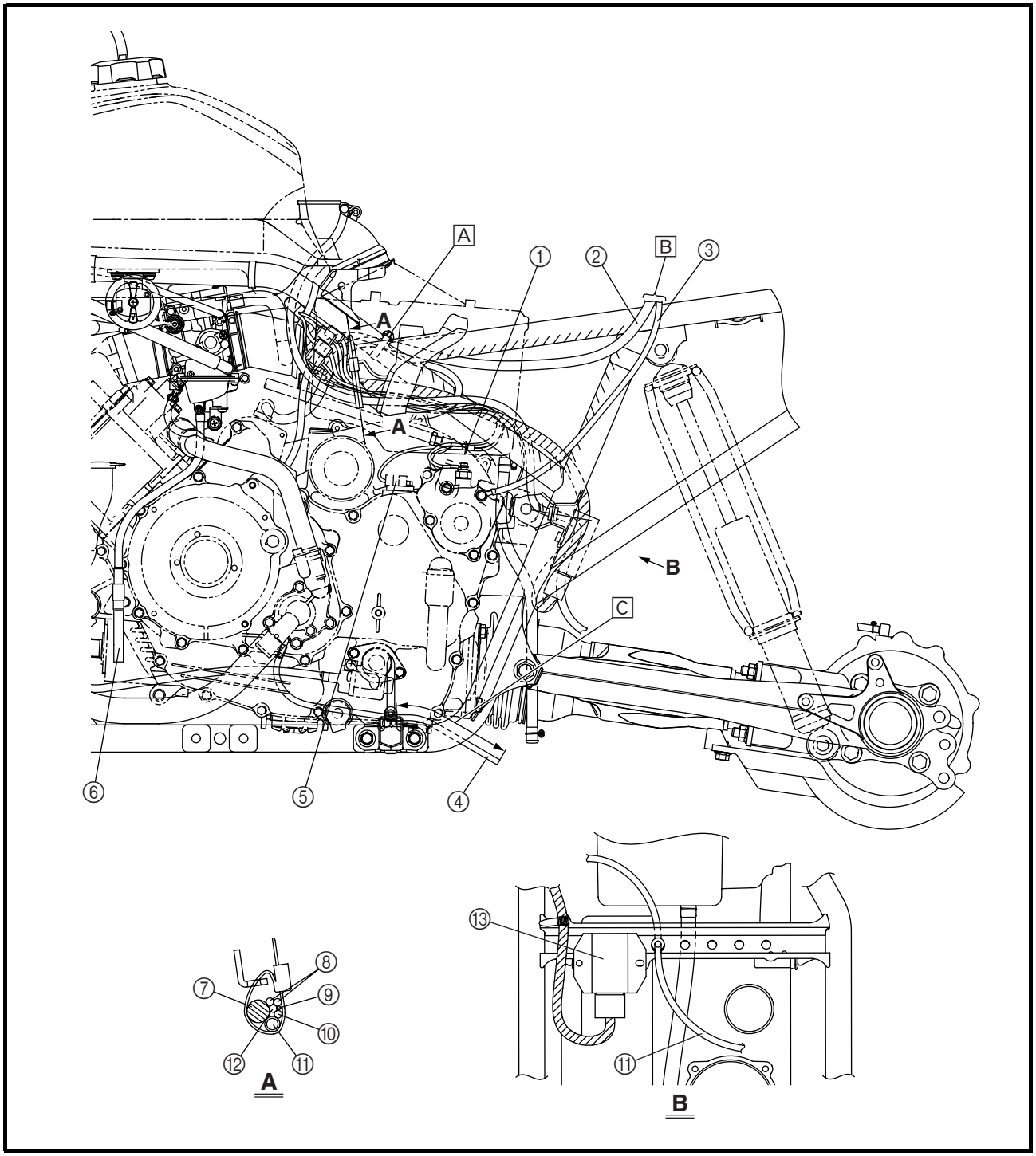

A Fasten the AC magneto lead and starter motor lead with a plastic band.
B To hole on the rear fender.
C 120 mm (4.72 in)

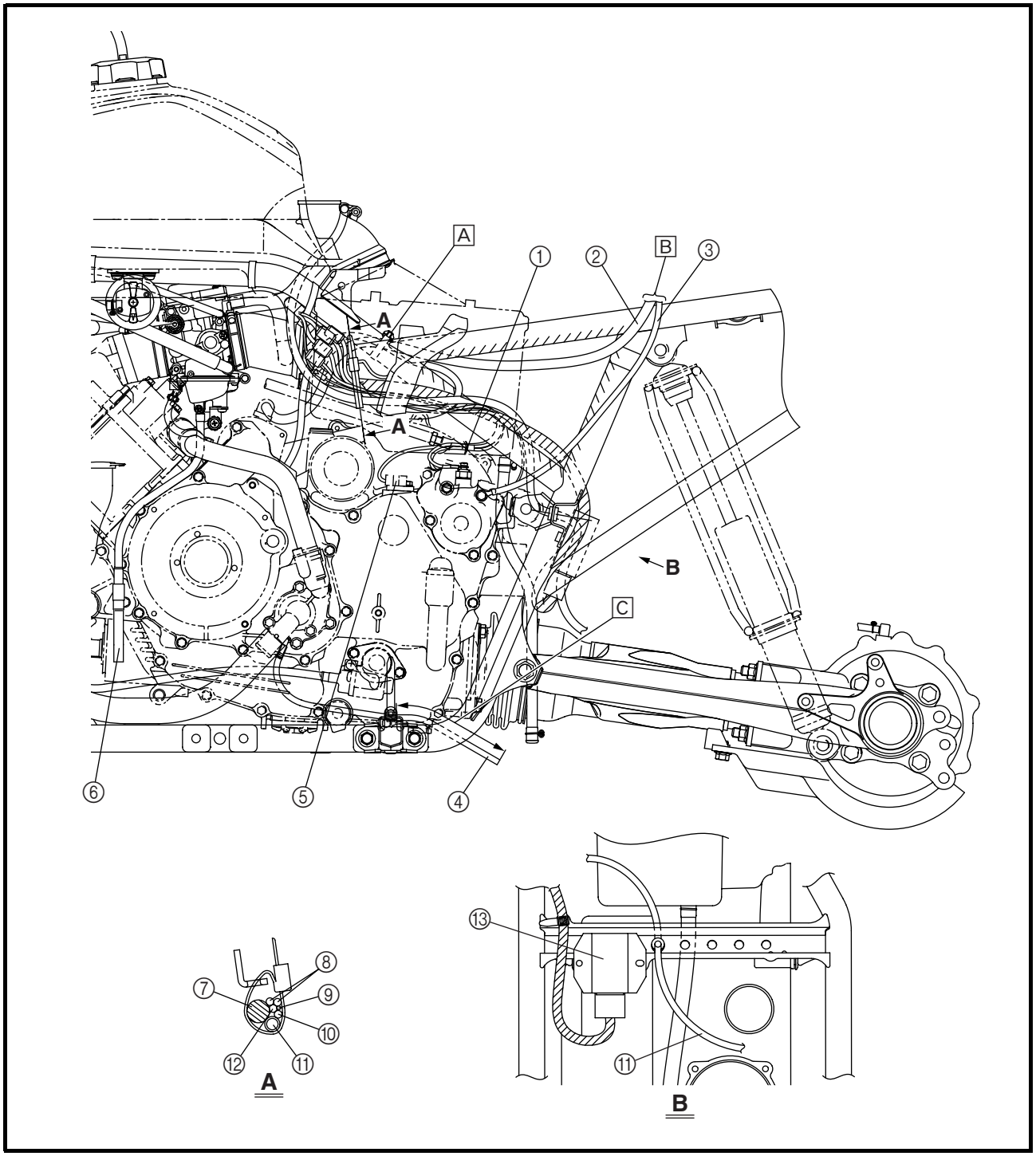

① Spark plug lead
② Rear brake cable
③ Select lever control cable
④ Rear brake reservoir hose
⑤ Rear brake light switch lead

A Fasten the radiator inlet hose and fan motor breather hose with a plastic band.
B Pass the rear brake cable through the cable guide.
C Pass the rear brake reservoir hose, select lever control cable, and rear brake light switch lead through the cable guide.

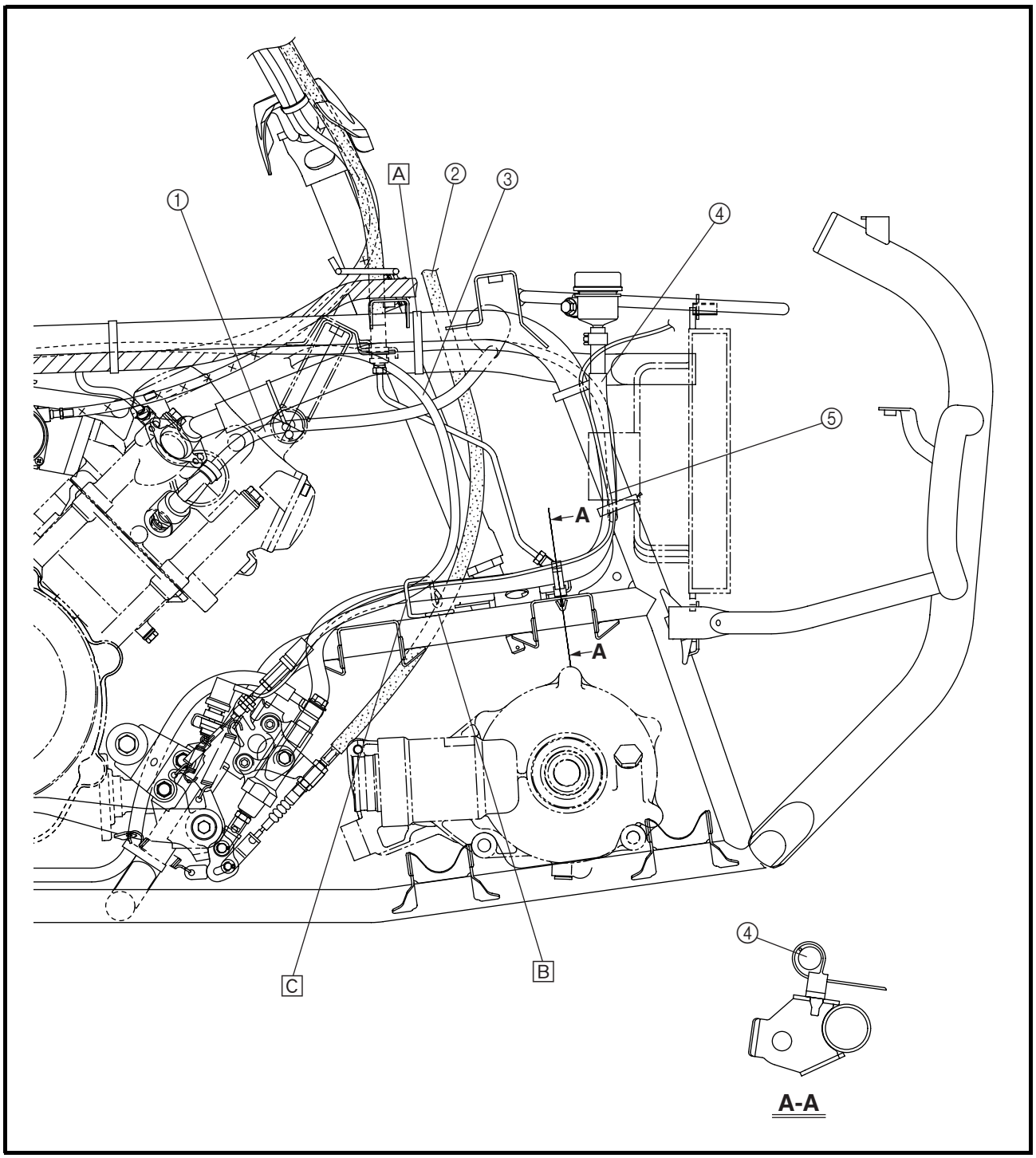

① Fan motor breather hose
② Cylinder head breather hose
③ Air filter case breather hose
④ Rear brake hose
⑤ Final drive gear case breather hose

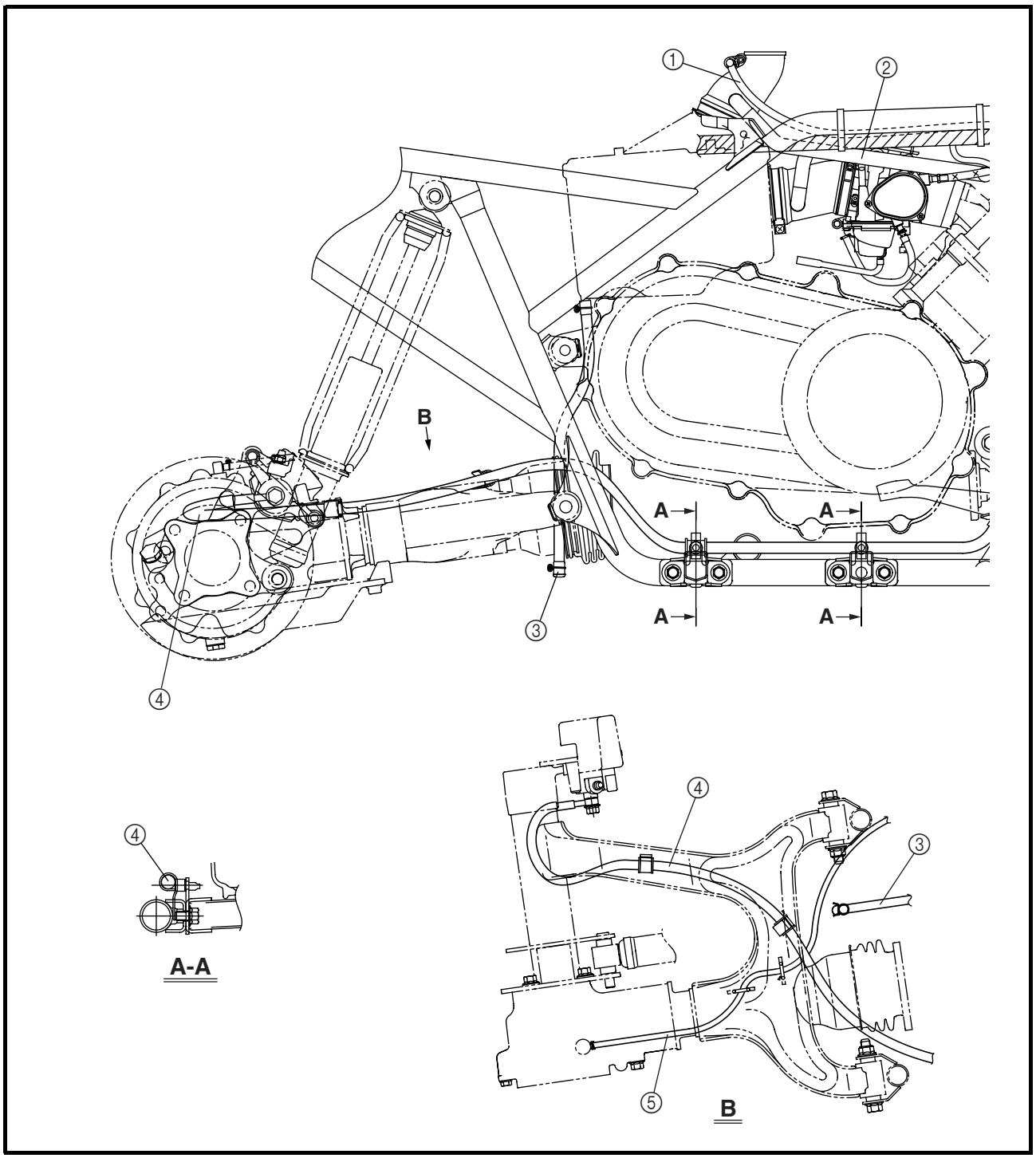

① Fan motor breather hose
② Wire harness
③ Positive battery lead
④ Tail/brake light
⑤ Main fuse
⑥ Starter relay
⑦ CDI unit
⑧ Fuse box
⑨ Negative battery lead
⑩ Final drive gear case breather hose

Ⓐ 30 mm(1.18 in)

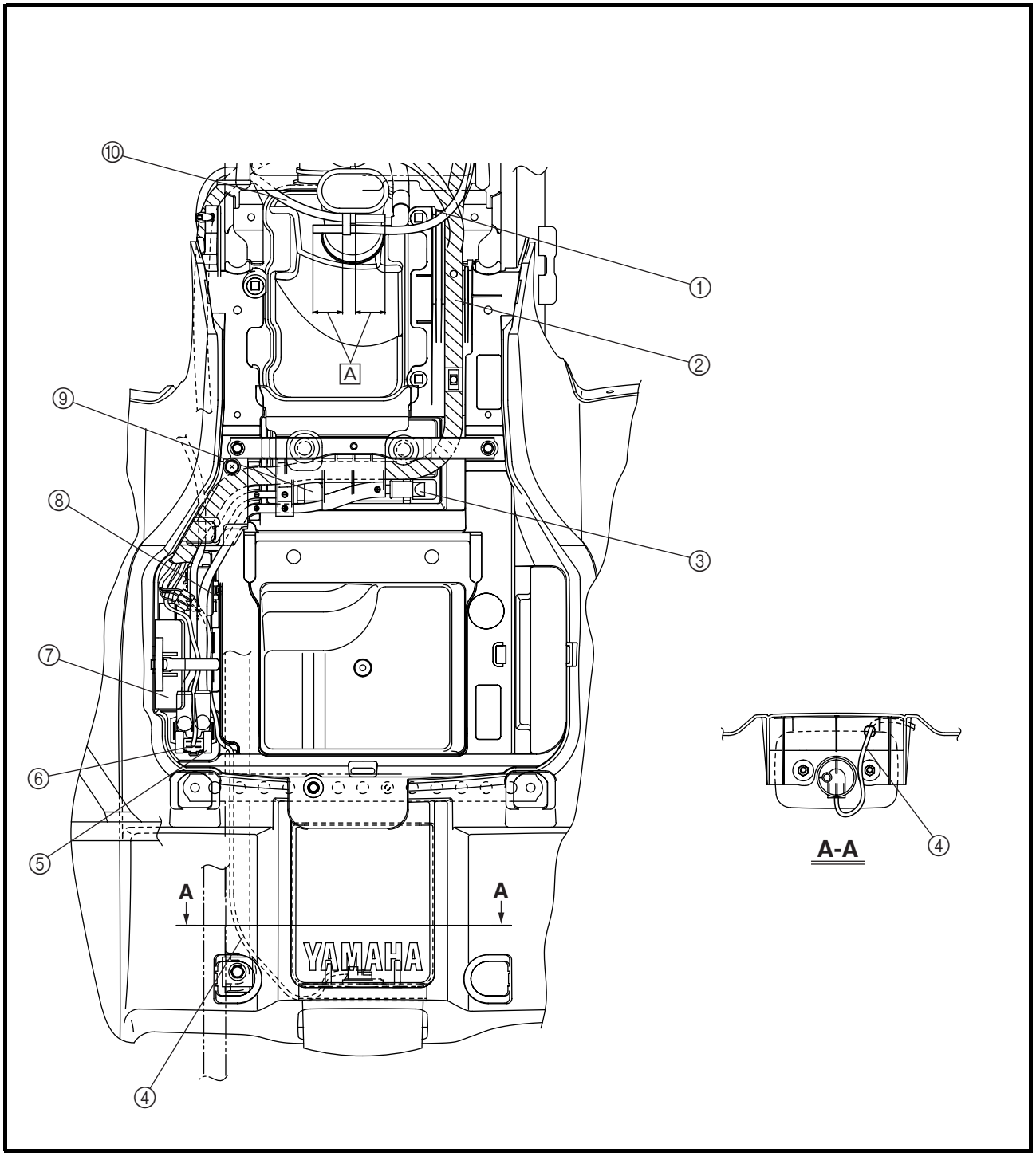

① Fan motor breather hose
② Front brake hose
③ Wire harness
④ Cylinder head breather hose
⑤ Throttle cable
⑥ Final drive gear case breather hose
⑦ Air vent hose
⑧ Starter cable
⑨ Rear brake cable

Ⓐ 70 mm (2.76 in)

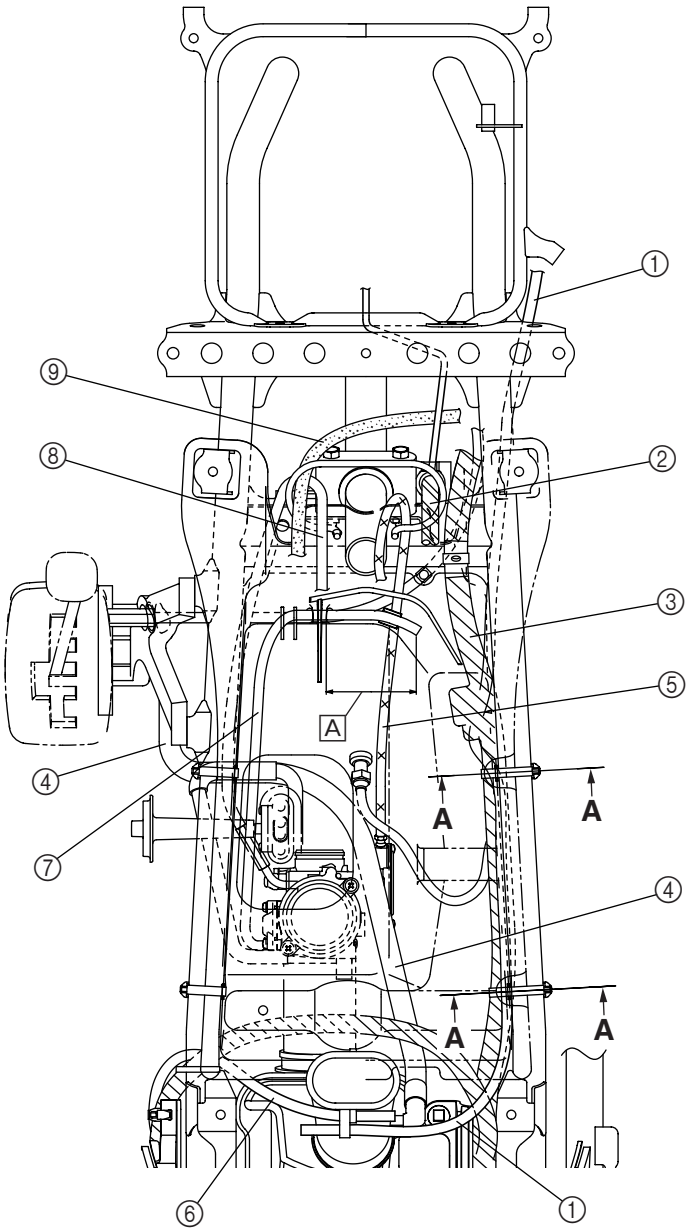

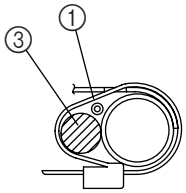

A-A

EB300000

PERIODIC CHECKS AND ADJUSTMENTS

INTRODUCTION

This chapter includes all information necessary to perform recommended inspections and adjustments. These preventive maintenance procedures, if followed, will ensure more reliable vehicle operation and a longer service life. The need for costly overhaul work will be greatly reduced. This information applies to vehicles already in service as well as to new vehicles that are being prepared for sale. All service technicians should be familiar with this entire chapter.

EB301000

PERIODIC MAINTENANCE/LUBRICATION INTERVALS

ITEM	ROUTINE	INITIAL			EVERY	
		1 month	3 months	6 months	6 months	1 year
Valves*	• Check valve clearance. • Adjust if necessary.	○		○	○	○
Cooling system	• Check coolant leakage. • Repair if necessary. • Replace coolant every 24 months.	○	○	○	○	○
Spark plug	• Check condition. • Adjust gap and clean. • Replace if necessary.	○	○	○	○	○
Air filter	• Clean. • Replace if necessary.	Every 20 ~ 40 hours. (More often in wet or dusty areas)				
Carburetor*	• Check and adjust idle speed/starter operation. • Adjust if necessary.		○	○	○	○
Fuel line*	• Check fuel hose for cracks or damage. • Replace if necessary.			○	○	○
Engine oil	• Replace (Warm engine before draining).	○		○	○	○
Engine oil filter cartridge	• Replace.	○		○		○
Engine oil strainer*	• Clean.	○		○		○
Final gear oil **Differential gear oil**	• Check oil level/oil leakage. • Replace every 12 months.	○				○
Front brake*	• Check operation/fluid leakage/see NOTE page 16. • Correct if necessary.	○	○	○	○	○
Rear brake*	• Check operation/fluid leakage/see NOTE page 16. • Correct if necessary.	○	○	○	○	○
V-belt*	• Check operation. • Check for cracks or damage every 12 months or 2,400 km (1,500 mi) whichever comes first.	○				○
Wheels*	• Check balance/damage/runout. • Repair if necessary.	○		○	○	○
Wheel bearing*	• Check bearing assemblies for looseness/damage. • Replace if damaged.	○		○	○	○
Front and rear suspension*	• Check operation. • Correct if necessary.			○		○
Steering system*	• Check operation/Replace if damaged. • Check toe-in/Adjust if necessary.	○	○	○	○	○
Axle boots*	• Check operation. • Replace if damaged.	○				○
Fittings and Fasteners*	• Check all chassis fittings and fasteners. • Correct if necessary.	○	○	○	○	○

* It is recommended that these items be serviced by a Yamaha dealer.

NOTE:

- Recommended brake fluid: DOT 4
- Brake fluid replacement:

1. When disassembling the master cylinder or caliper, replace the brake fluid. Normally check the brake fluid level and add fluid as required.
2. On the inner parts of the master cylinder and caliper, replace the oil seals every two years.
3. Replace the brake hoses every four years, or if cracked or damaged.

CHASSIS

ADJUSTING THE REAR BRAKE LIGHT SWITCH

NOTE:
The rear brake light switch is operated by movement of the brake pedal.
The rear brake light switch is properly adjusted when the brake light comes on just before the braking effect starts.

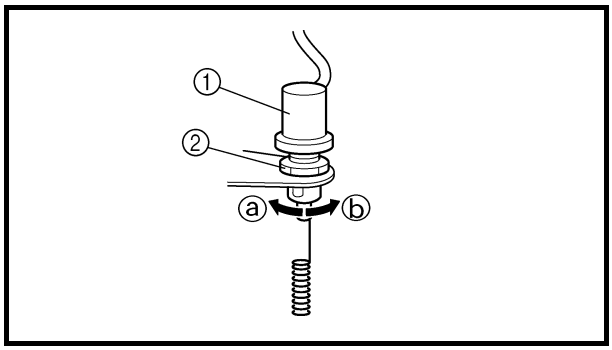

1.Check:
- Rear brake light operation timing
  Incorrect → Adjust.

2.Adjust:
- Rear brake light operation timing

****

- Hold the main body ① of the rear brake light switch so that it does not rotate and turn the adjusting nut ② in direction ⓐ or ⓑ until the rear brake light comes on at the proper time.

Direction ⓐ	**Brake light comes on sooner.**
Direction ⓑ	**Brake light comes on later.**

****

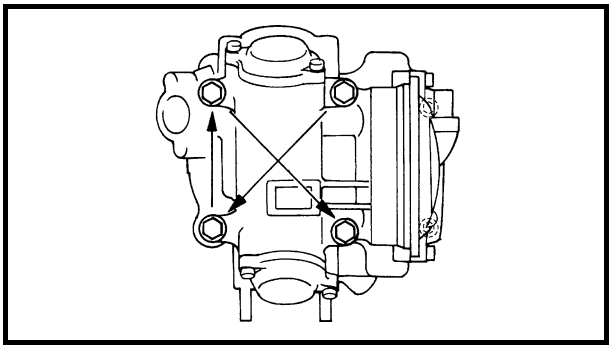

ENGINE

CYLINDER HEAD

CYLINDER HEAD INSTALLATION

1.Install:

- Cylinder head
- Bolt (M10) — 40 Nm (4.0 m • kg, 29 ft • lb)
- Bolt (M6) — 10 Nm (1.0 m • kg, 7.2 ft • lb)

NOTE:

- Lubricate the washer with engine oil.
- Tighten the bolts (M10) in two stages and a crisscross pattern.

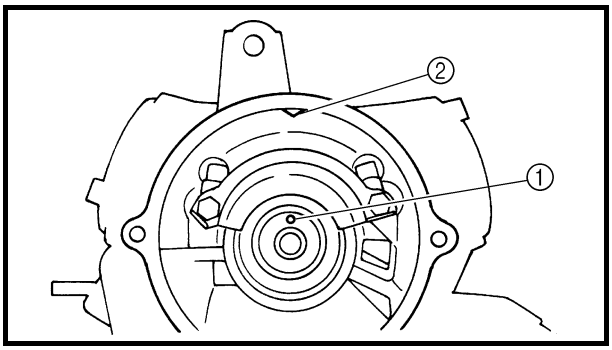

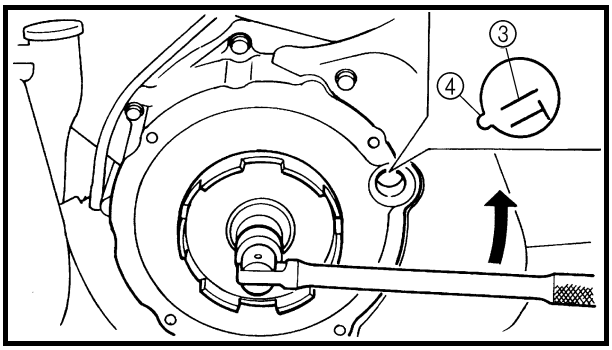

2.Install:

- Camshaft sprocket

****

Installing steps:

- Rotate the camshaft to align the camshaft pin ① with the cylinder head match mark ②.
- Turn the crankshaft counterclockwise with a wrench.
- Align the “T” mark ③ on the rotor with the stationary pointer ④ on the crankcase cover. When the “T” mark is aligned with the stationary pointer, the piston is at the Top Dead Center (T.D.C.).

CAUTION:

Do not turn the crankshaft during the camshaft sprocket installation.

- Place the timing chain onto the camshaft sprocket.
- Install the camshaft sprocket onto the camshaft and finger tighten the sprocket bolt.

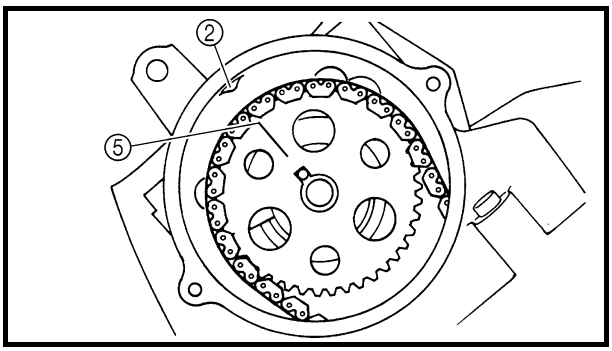

NOTE:
Be sure the "I" mark ⑤ on the camshaft sprocket is aligned with the match mark ② on the cylinder head.

- Force the camshaft clockwise and counter-clockwise to remove timing chain slack.
- Insert a screwdriver into the timing chain tensioner hole and push the timing chain guide inward.
- While pushing the timing chain guide, be sure that the camshaft sprocket punch mark ⑤ is aligned with the cylinder head match mark ②.
- If the marks are aligned, tighten the camshaft sprocket bolt. If the marks are not aligned, change the meshing position of the camshaft sprocket and timing chain.

****

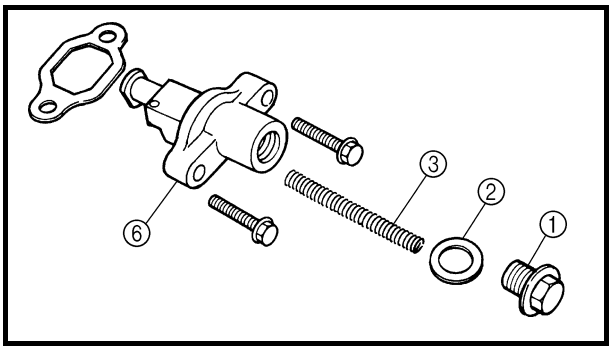

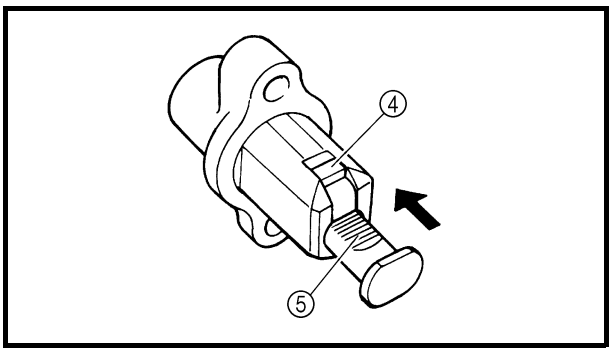

3.Install:
- Timing chain tensioner

****

Installation steps:
- Remove the tensioner cap bolt ①, washer ② and spring ③.
- Release the timing chain tensioner one-way cam ④ and push the tensioner rod ⑤ all the way in.
- Install the tensioner ⑥ with a new gasket into the cylinder.

	Bolts (timing chain tensioner): 11 Nm (1.1 m • kg, 8.0 ft • lb)

⚠ WARNING
Always use a new gasket.

- Install the spring, washer and cap bolt.

	Cap bolt (timing chain tensioner): 23 Nm (2.3 m • kg, 17 ft • lb)

****

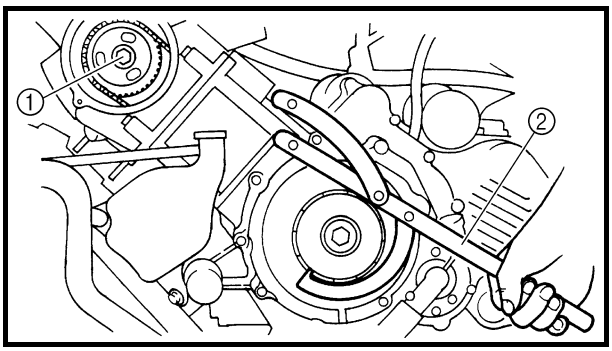

4.Tighten:
- Camshaft sprocket bolt ①

60 Nm (6.0 m • kg, 43 ft • lb)

NOTE:
Use the rotor holder ② to hold the starter pulley.

Rotor holder:
P/N. YU-01235, 90890-01235

5.Check:
- Camshaft sprocket punch mark
- Rotor “T” mark
  Out of alignment → Adjust.

RECOIL STARTER AND CDI MAGNETO

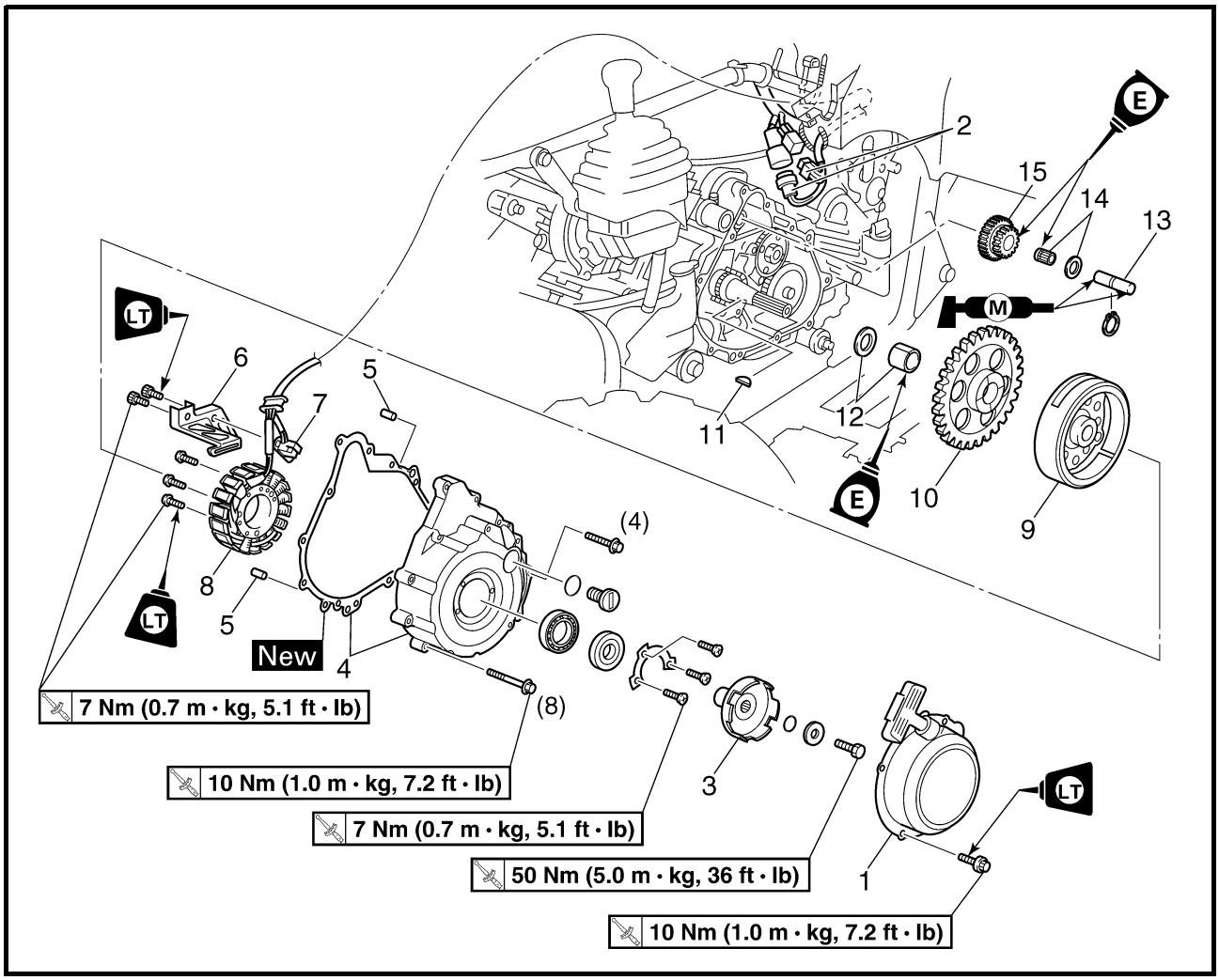

Order	Job name/Part name	Q'ty	Remarks
	CDI magneto removal		Remove the parts in the order below.
	Engine oil		Drain. Refer to "ENGINE OIL REPLACEMENT" in CHAPTER 3.
	Seat and side panels		Refer to "SEAT AND SIDE PANELS" in CHAPTER 3.
	Left footrest board		Refer to "FOOTREST BOARDS" in CHAPTER 3.
1	Recoil starter assembly	1	
2	CDI magneto coupler	2	Disconnect.
3	Starter pulley	1	Refer to "CDI MAGNETO REMOVAL/ INSTALLATION".
4	Crankcase cover (left)/gasket	1/1	
5	Dowel pin	2	
6	Lead holder	1	

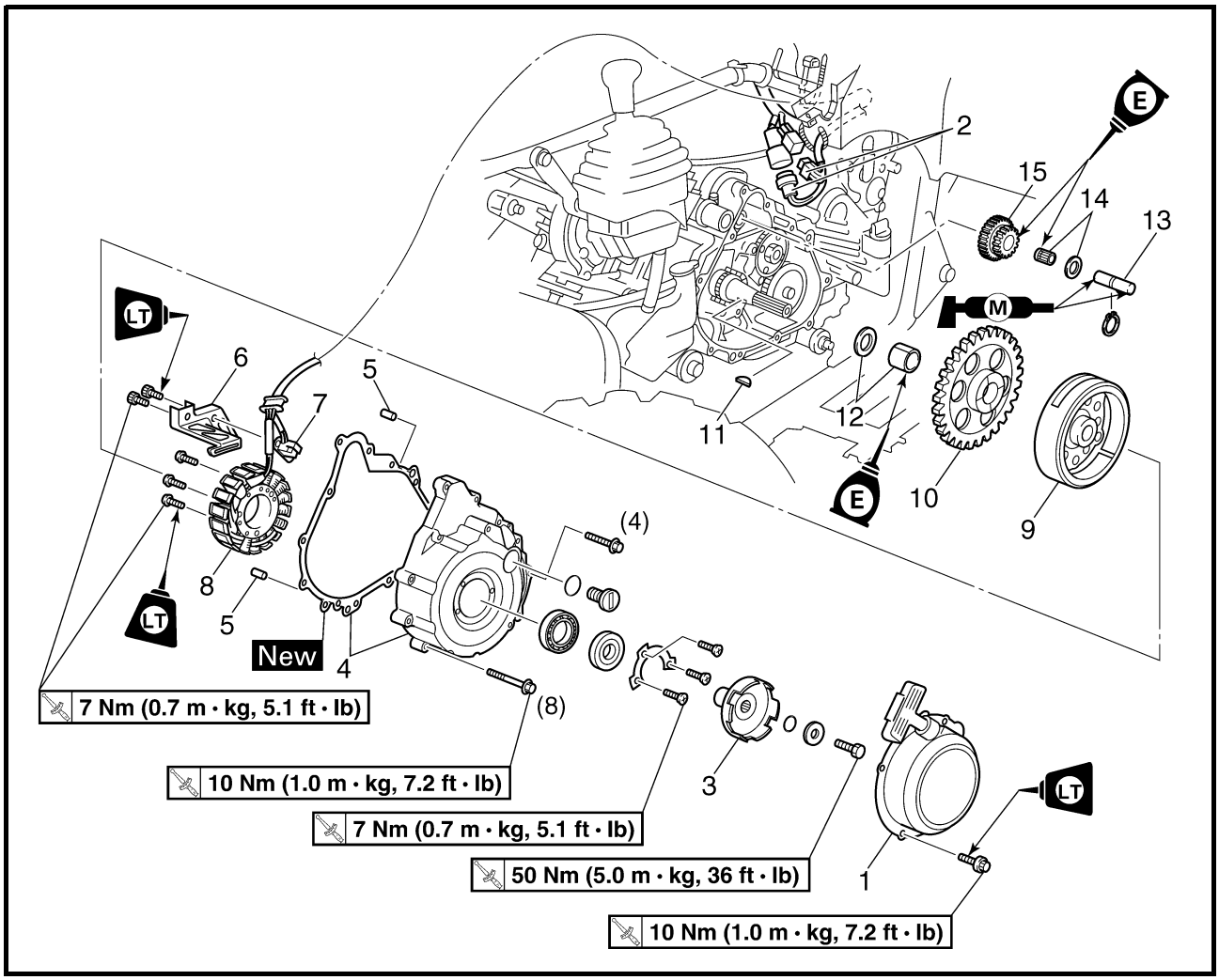

Order	Job name/Part name	Q'ty	Remarks
7	Pickup coil	1	
8	Stator assembly	1	
9	CDI rotor	1	Refer to "CDI MAGNETO REMOVAL/ INSTALLATION".
10	Starter wheel gear	1	
11	Woodruff key	1	
12	Bush/washer	1/1	
13	Starter idle gear shaft	1	
14	Washer/bearing	1/1	
15	Starter idle gear	1	
			For installation, reverse the removal procedure.

TRANSMISSION

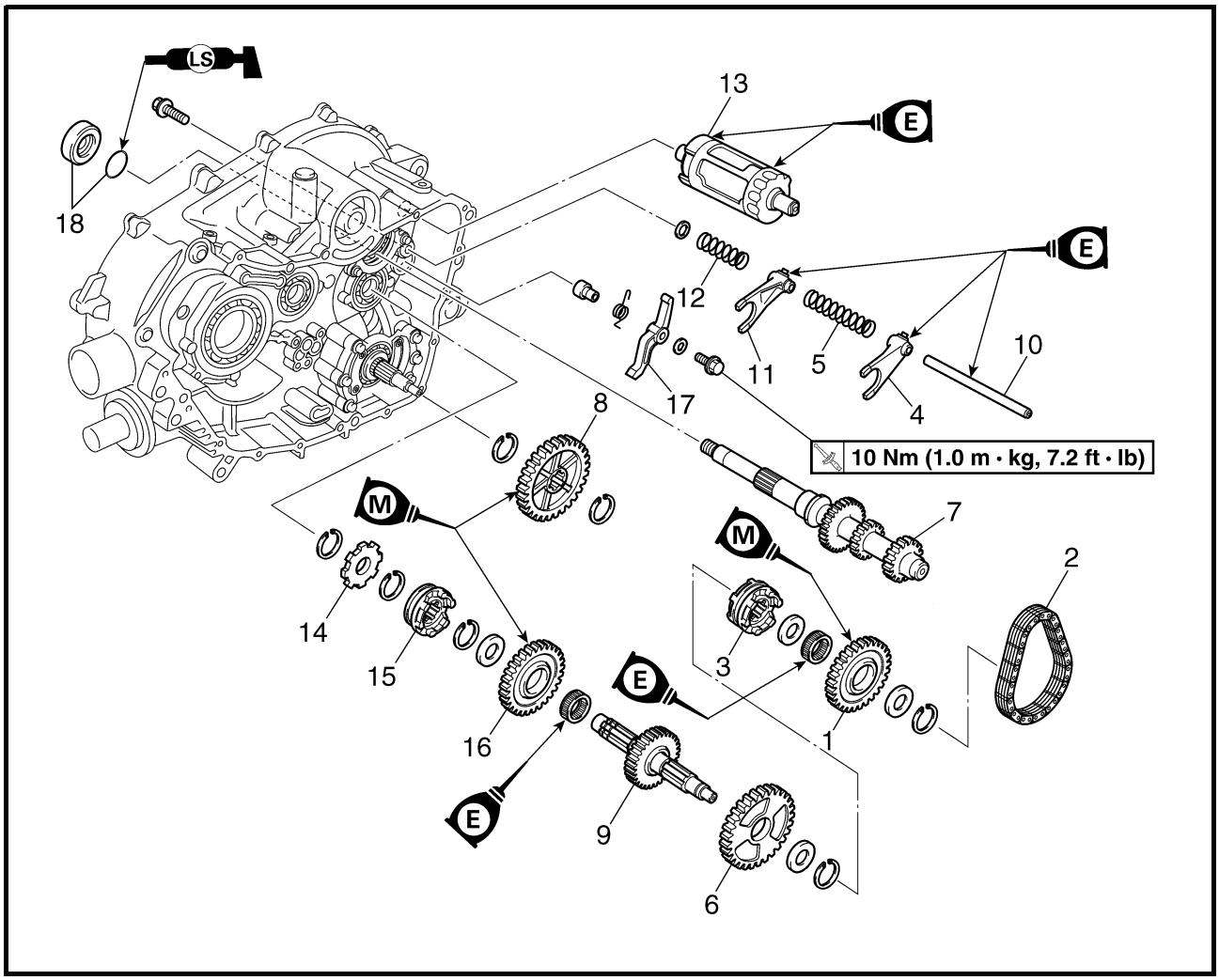

Order	Job name/Part name	Q'ty	Remarks
	Transmission removal		Remove the parts in the order below.
	Crankcase separation		Refer to "CRANKCASE".
1	Driven sprocket	1	
2	Chain	1	
3	Clutch dog 2	1	
4	Shift fork "L"	1	
5	Spring	1	
6	Low wheel gear	1	
7	Secondary shaft	1	
8	Middle driven gear	1	
9	Drive axle assembly	1	
10	Guide bar	1	

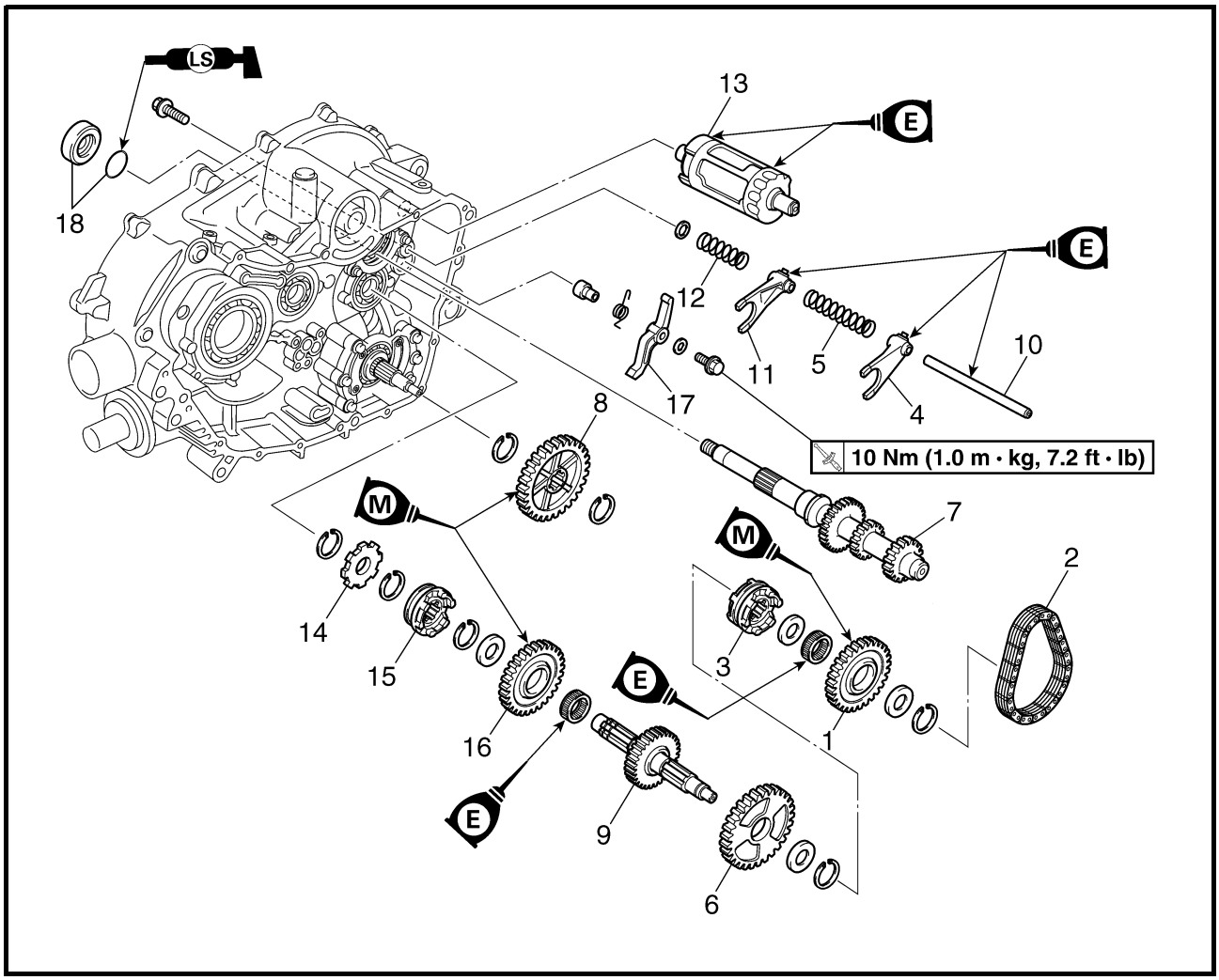

Order	Job name/Part name	Q'ty	Remarks
11	Shift fork "R"	1	
12	Spring	1	
13	Shift cam	1	
14	Stopper wheel	1	
15	Clutch dog 1	1	
16	High wheel gear	1	
17	Stopper lever	1	
18	Spacer/O-ring	1/1	
			For installation, reverse the removal procedure.

ELECTRICAL

EB803000

ELECTRIC STARTING SYSTEM

CIRCUIT DIAGRAM

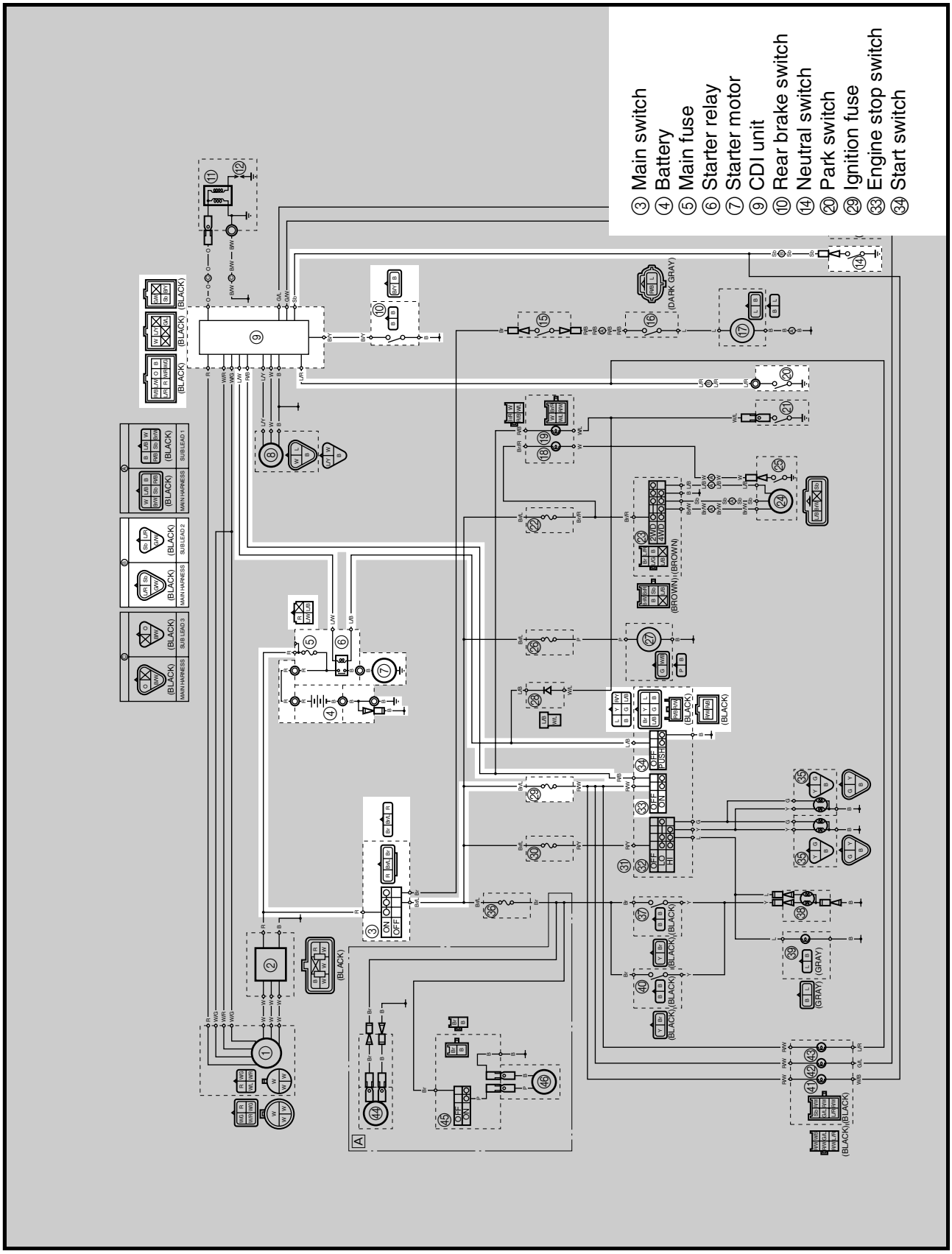

EB803020
TROUBLESHOOTING

IF THE STARTER MOTOR FAILS TO OPERATE:

Procedure
Check:
1. Fuse (main, ignition)
2. Battery
3. Starter motor
4. Starter relay
5. Main switch
6. Engine stop switch
7. Neutral switch
8. Rear brake switch
9. Park switch
10. Start switch
11. Wiring connection (the entire starting system)

NOTE:
- Remove the following part(s) before troubleshooting:
  1) Seat
  2) Fuel tank side panels
  3) Fuel tank
  4) Air cleaner case
  5) Front carrier
  6) Front fender panel
- Use the following special tool(s) for troubleshooting.

Pocket tester:
P/N. YU-03112, 90890-03112

EB802011

1. Fuse (main, ignition)

Refer to "SWITCH INSPECTION". (Manual No.: 5GH3-AE1)

NO CONTINUITY → Replace the fuse.

CONTINUITY ↓

EB802012

2. Battery

- Check the battery condition.
  Refer to "BATTERY INSPECTION" in CHAPTER 3. (Manual No.: 5GH3-AE1)

Open-circuit voltage:
12.8 V or more at 20 °C (68 °F)

INCORRECT →
- Clean the battery terminals.
- Recharge or replace the battery.

CORRECT ↓

*

3.Starter motor

- Connect the battery positive terminal ① and starter motor cable ② using a jumper lead ③ ✻.
- Check the operation of the starter motor.

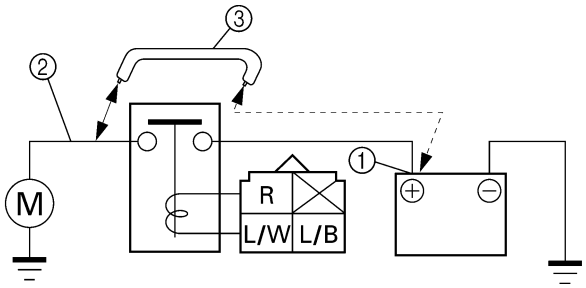

✻

⚠ WARNING

- **A wire that is used as a jumper lead must have the equivalent capacity or more as that of the battery lead, otherwise the jumper lead may burn.**
- **This check is likely to produce sparks, so be sure that no flammable gas or fluid is in the vicinity.**

DOES NOT TURN

Repair or replace the starter motor.

TURNS

4.Starter relay

- Remove the starter relay from the wire harness.
- Connect the pocket tester (Ω × 1) and the battery (12 V) to the starter relay terminals.

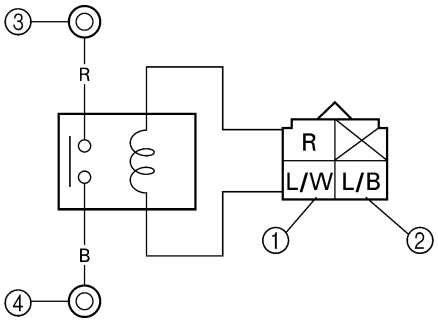

Battery (+) terminal → Blue/White terminal ①
Battery (–) terminal → Blue/Black terminal ②

Tester (+) lead → Red terminal ③
Tester (–) lead → Black terminal ④

- Check the starter relay for continuity.

NO CONTINUITY

Replace the starter relay.

CONTINUITY

5.Main switch

Refer to "SWITCH INSPECTION". (Manual No.: 5GH3-AE1)

INCORRECT

Replace the main switch.

CORRECT

✻

*

6.Engine stop switch

Refer to “SWITCH INSPECTION”. (Manual No.: 5GH3-AE1)

INCORRECT → Replace the handlebar switch (right).

CORRECT ↓

7.Neutral switch

Refer to “SWITCH INSPECTION”. (Manual No.: 5GH3-AE1)

INCORRECT → Replace the neutral switch.

CORRECT ↓

8.Rear brake switch

Refer to “SWITCH INSPECTION”. (Manual No.: 5GH3-AE1)

INCORRECT → Replace the rear brake switch.

CORRECT ↓

9.Park switch

Refer to “SWITCH INSPECTION”. (Manual No.: 5GH3-AE1)

INCORRECT → Replace the park switch.

CORRECT ↓

10.Start switch

Refer to “SWITCH INSPECTION”. (Manual No.: 5GH3-AE1)

INCORRECT → Replace the handlebar switch (left).

CORRECT ↓

EB803028

11.Wiring connection

- Check the connections of the entire starting system.
  Refer to “CIRCUIT DIAGRAM”.

POOR CONNECTION → Properly connect the starting system.

EB806000

SIGNAL SYSTEM

CIRCUIT DIAGRAM

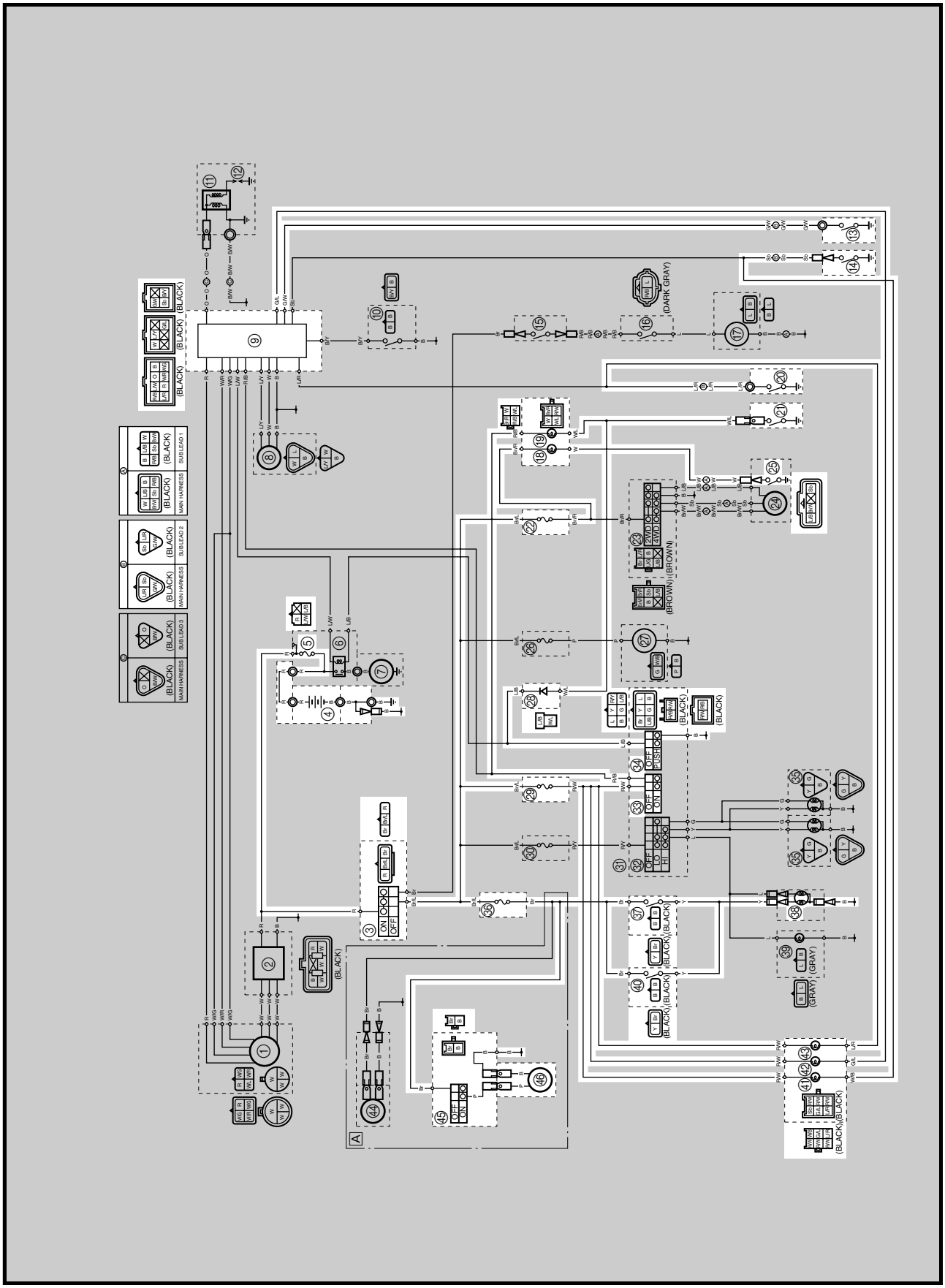

③ Main switch
④ Battery
⑤ Main fuse
⑨ CDI unit
⑬ Reverse switch
⑭ Neutral switch
⑱ Four-wheel drive indicator light
⑲ Coolant temperature indicator light
⑳ Park switch
㉑ Thermo switch
㉒ Four-wheel drive fuse
㉕ Four-wheel drive switch
㉘ Diode
㉙ Ignition fuse
㉝ Engine stop switch
㉞ Start switch
㊱ Signal fuse
㊲ Front brake light switch
㊳ Tail/brake light
㊵ Rear brake light switch
㊶ Neutral indicator light
㊷ Reverse indicator light
㊸ Park indicator light
㊺ Horn switch
㊻ Horn

[A] For Europe and Oceania

CHECKING THE SIGNAL SYSTEM

1.If the tail/brake light fails to come on:

1.Bulb and bulb socket

- Check the bulb and bulb socket for continuity.

NO CONTINUITY → Replace the bulb and/or bulb socket.

CONTINUITY ↓

2.Brake light switches

Refer to “SWITCH INSPECTION”. (Manual No.: 5GH3-AE1)

NO CONTINUITY → Replace the brake switch.

CONTINUITY ↓

3.Voltage

- Connect the pocket tester (DC 20V) to the bulb socket connector.

Tester (+) lead → Yellow terminal ①
Tester (–) lead → Black terminal ②

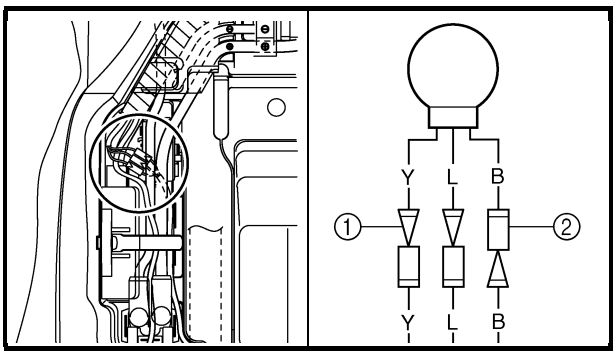

- Turn the main switch to “ON”.
- Check the voltage (12 V) of the “Yellow” lead on the bulb socket connector.

OUT OF SPECIFICATION → The wiring circuit from the main switch to the bulb socket connector is faulty, repair it.

MEETS SPECIFICATION ↓

This circuit is not faulty.

2.If the reverse indicator light fails to come on:

1.Bulb and bulb socket

- Check the bulb and bulb socket for continuity.

NO CONTINUITY → Replace the bulb and/or bulb socket.

CONTINUITY ↓

2.Reverse switch

Refer to “SWITCH INSPECTION”. (Manual No.: 5GH3-AE1)

NO CONTINUITY → Replace the reverse switch.

CONTINUITY ↓

3.Voltage

- Connect the pocket tester (DC 20V) to the bulb socket coupler.

Tester (+) lead → Red/White terminal ①
Tester (–) lead → Green/Blue terminal ②

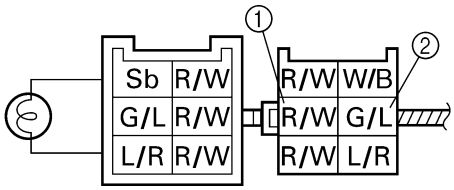

- Turn the main switch to “ON”.
- Check the voltage (12 V).

OUT OF SPECIFICATION → The wiring circuit from the main switch to the bulb socket connector is faulty, repair it.

MEETS SPECIFICATION ↓

This circuit is not faulty.

YFM400FWA(P) 2002 WIRING DIAGRAM

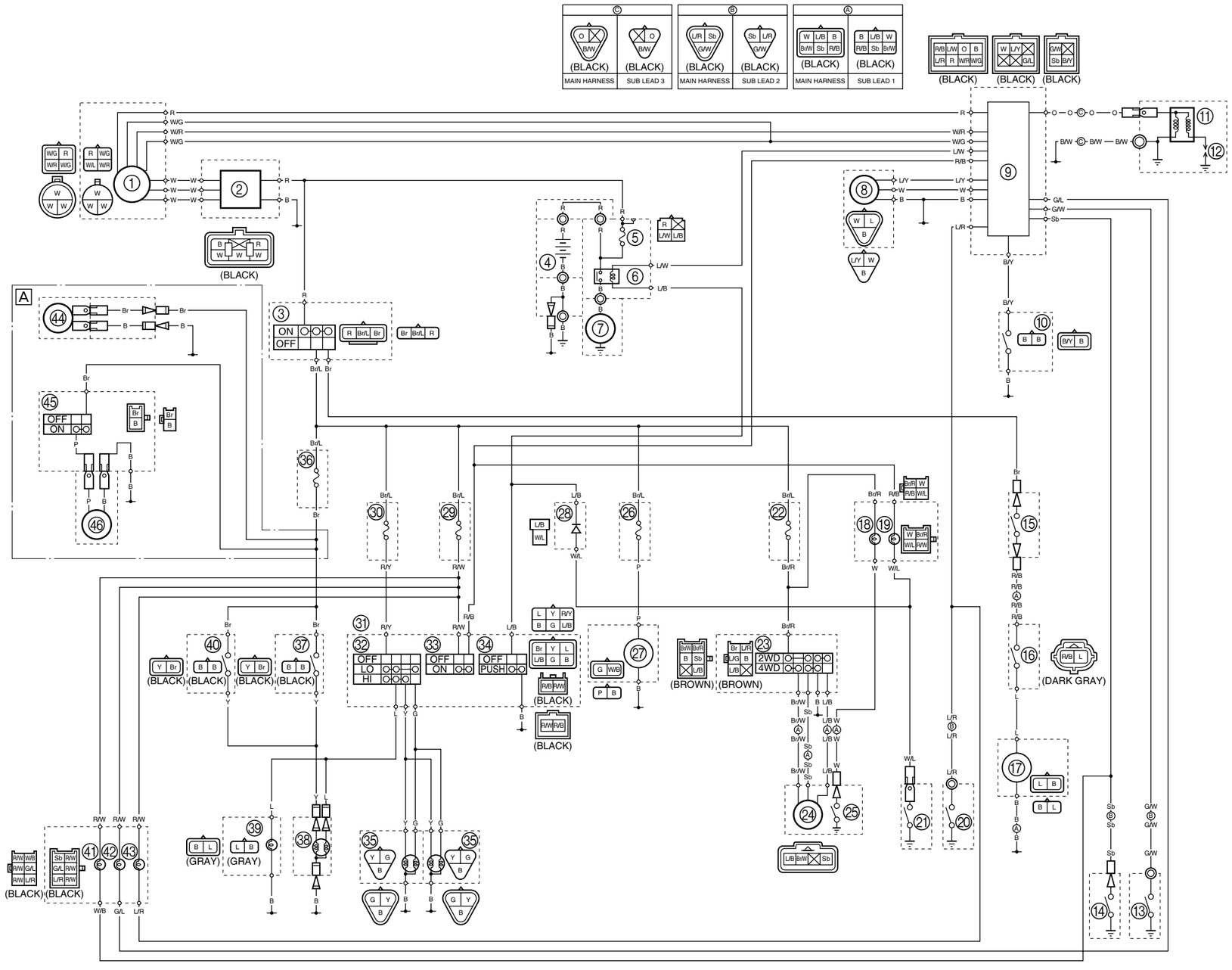

① CDI magneto
② Rectifier/regulator
③ Main switch
④ Battery
⑤ Main fuse
⑥ Starter relay
⑦ Starter motor
⑧ Speed sensor
⑨ CDI unit
⑩ Rear brake switch
⑪ Ignition coil
⑫ Spark plug
⑬ Reverse switch
⑭ Neutral switch
⑮ Circuit breaker (fan motor)
⑯ Thermo switch
⑰ Fan motor
⑱ Four-wheel drive indicator light
⑲ Coolant temperature indicator light
⑳ Park switch
㉑ Thermo switch
㉒ Four-wheel drive fuse
㉓ On command four-wheel drive select switch
㉔ Gear motor
㉕ Four-wheel drive switch
㉖ Auxiliary DC jack fuse
㉗ Auxiliary DC jack
㉘ Diode
㉙ Ignition fuse
㉚ Headlight fuse
㉛ Handlebar switch (left)
㉜ Lights switch
㉝ Engine stop switch
㉞ Start switch
㉟ Headlight
㊱ Signal fuse
㊲ Front brake light switch
㊳ Tail/brake light
㊴ Speedometer light
㊵ Rear brake light switch
㊶ Neutral indicator light
㊷ Reverse indicator light
㊸ Park indicator light
㊹ Hour meter (optional)
㊺ Horn switch
㊻ Horn

Ⓐ For Europe and Oceania

COLOR CODE

B ..... Black	P ..... Pink	B/W ..... Black/White	G/L ..... Green/Blue	L/R ..... Blue/Red	R/Y ..... Red/Yellow
Br ..... Brown	R ..... Red	B/Y ..... Black/Yellow	G/W ..... Green/White	L/W ..... Blue/White	W/B ..... White/Black
G ..... Green	Sb ..... Sky blue	Br/L ..... Brown/Blue	G/Y ..... Green/Yellow	L/Y ..... Blue/Yellow	W/G ..... White/Green
L ..... Blue	W ..... White	Br/R ..... Brown/Red	L/B ..... Blue/Black	R/B ..... Red/Black	W/L ..... White/Blue
O ..... Orange	Y ..... Yellow	Br/W ..... Brown/White	L/G ..... Blue/Green	R/W ..... Red/White	W/R ..... White/Red